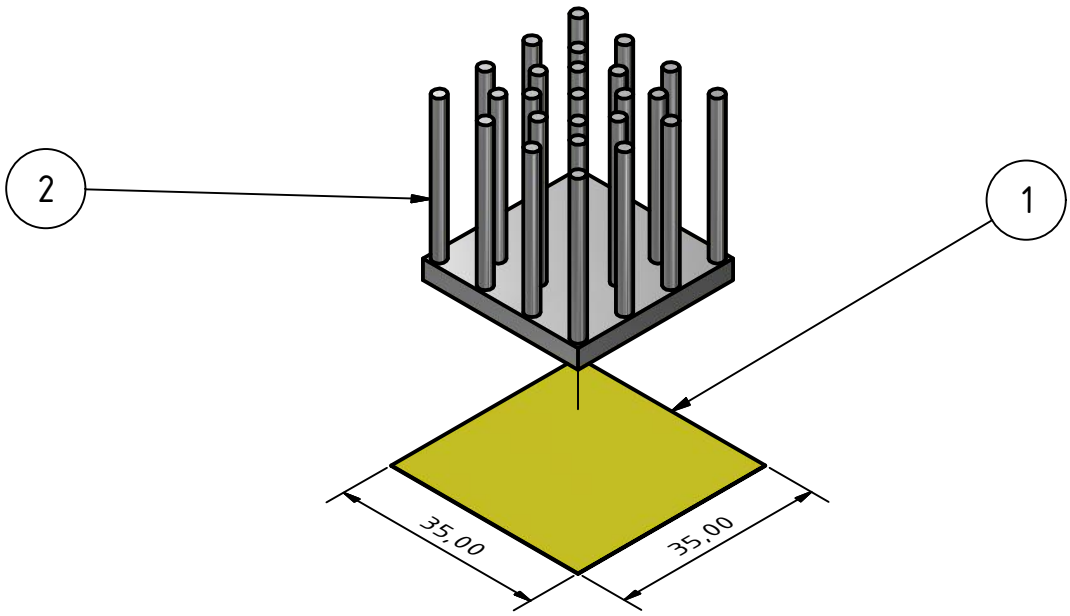

ASSEMBLY INSTRUCTIONS:
Remove any protective foil from the thermal foil and place it on the PCB board.
Place the heatsink on top, 3mm from each edge inward.
Use a heatgun or similar to apply a hot airstream (150°C) centrally from the top down onto the heatsink.
While heating up, apply moderate pressure with a suitable tool to the heatsink,
from the top down for 90 seconds.
Check for adhesion of assembly.

BILL OF COMPONENTS

OBJECT	QUANTITY	DESCRIPTION	SUPPLIER	REFERENCE NO.
1	1	Thermofoil	BOYD	PC03MT100
2	1	Heatsink 29x29mm	Fischer Electronik	ICK S 29x29x30

	Datum	Name
Gezeichnet	02.03.2021	Wernegger
Kontrolliert		
Norm		

Heatsink Assembly

HT100002854

1

A4

Status	Änderungen	Datum	Name